Referense 421824 | A3

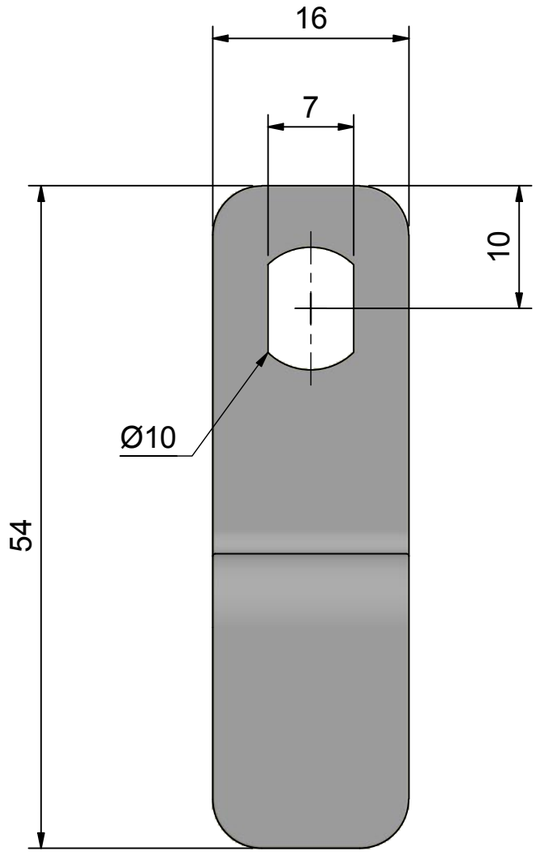

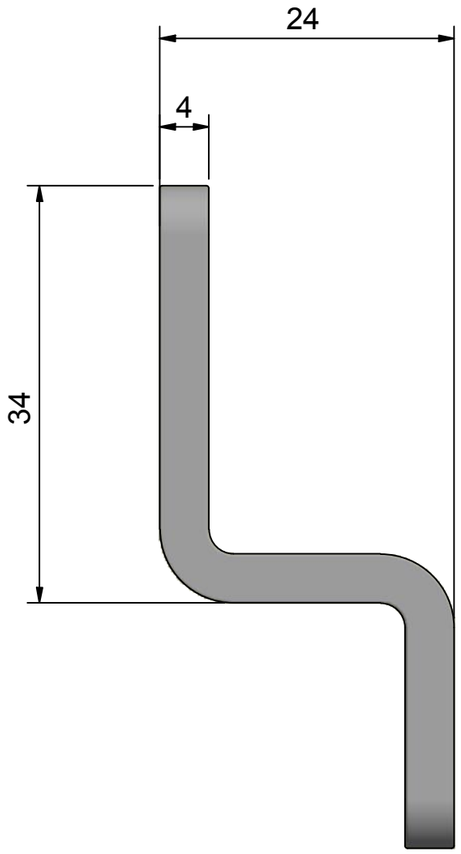

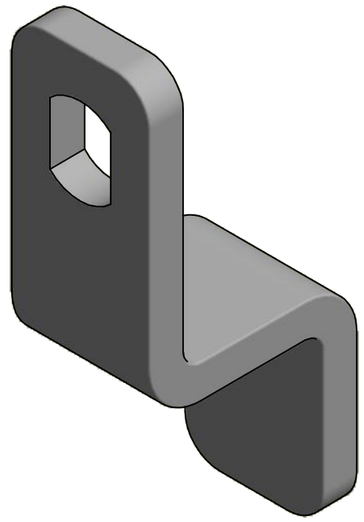

AISI316/Electro polished	Date 190916/HH
Description **Angled cam for thk. 27-90 mm**	Item no. **422272**